Self-triggering readout system for the neutron lifetime experiment PENeLOPE

Dominic Gaisbauer

Technical University of Munich

Mainz, 12. April 2016

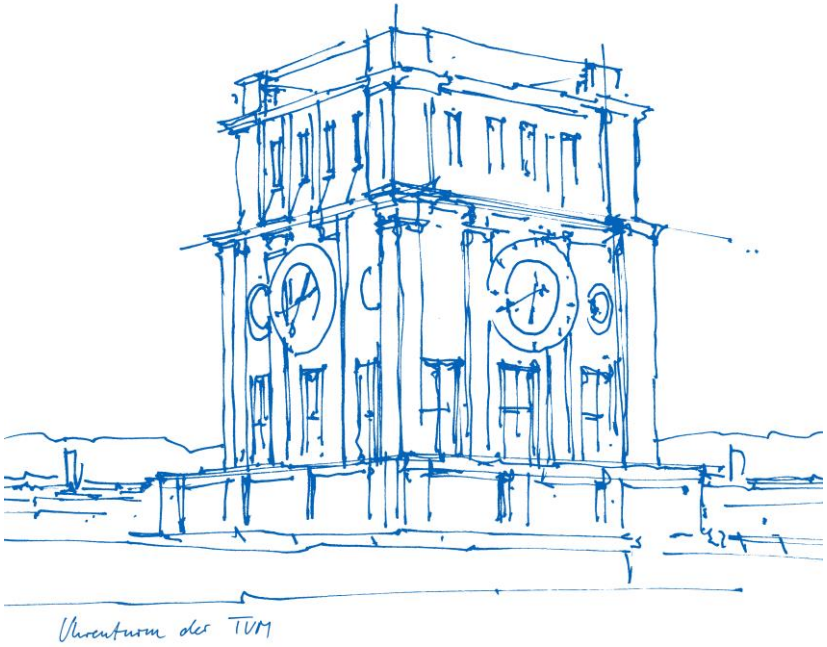

PENeLOPE

- **P**recision **E**xperiment on **Ne**utron **L**ifetime **O**perating with **P**roton **E**xtraction
- Will be located at the Forschungs-Neutronenquelle Heinz Maier-Leibnitz (FRM II)
- Magneto-gravitational trap for ultra-cold neutrons
- Aiming for a precision of ± 0.1 s
- Measuring protons and neutrons

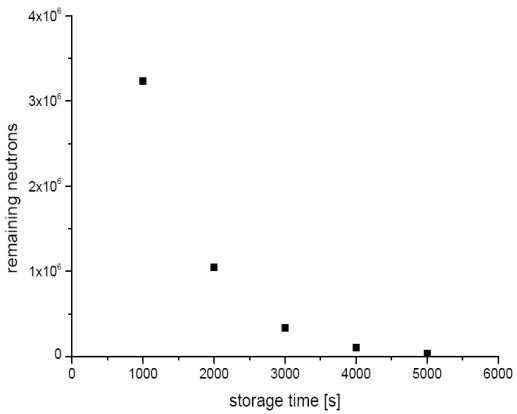

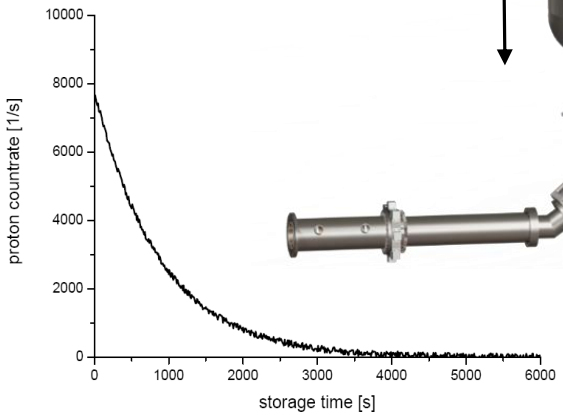

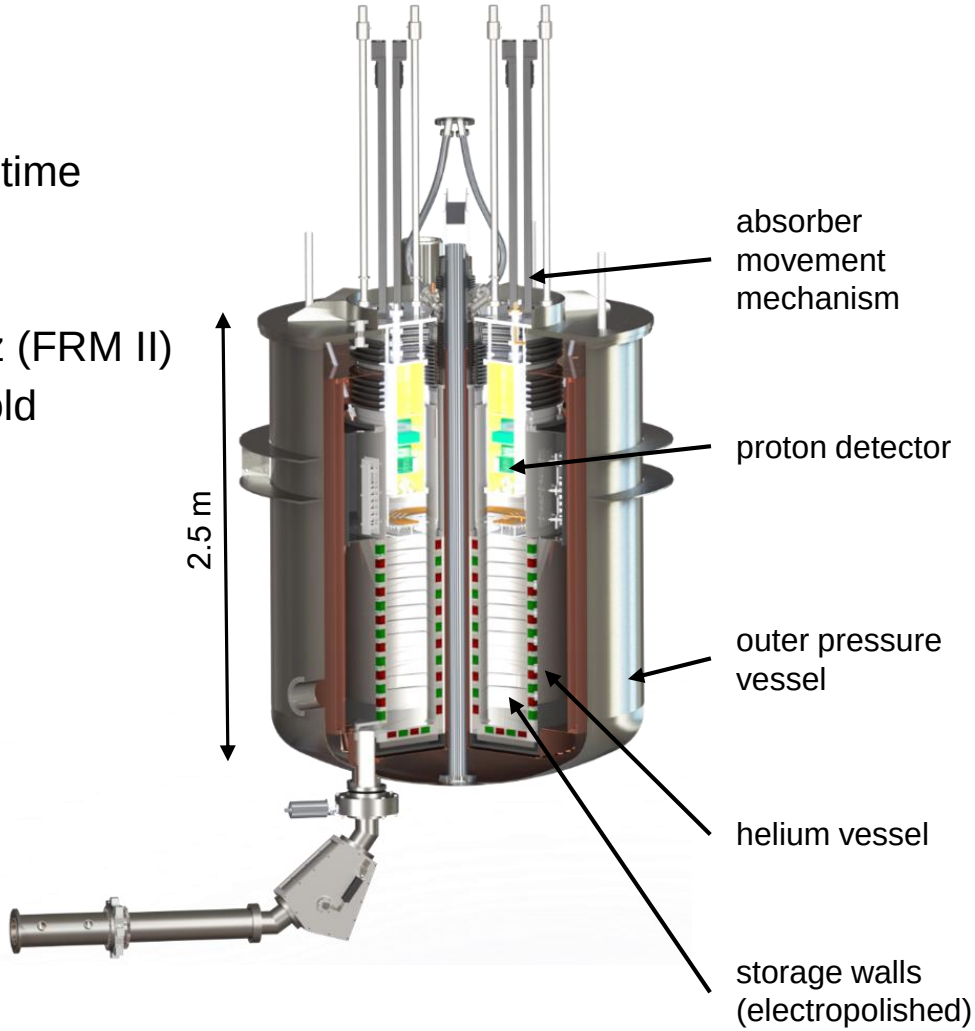

Proton Detector Requirements

- Protons are guided via magnetic and accelerated by electrical field
- Complete detector and electronics on -30 kV
- Detector at 77 K
- Electronics at 300 K
- Active area of 0.23 m^2
- Peak event rate including margin:
  130.000 events/s + bg ≈ data rate: 500 Mbit/s
- Background is < 1/Ch/s

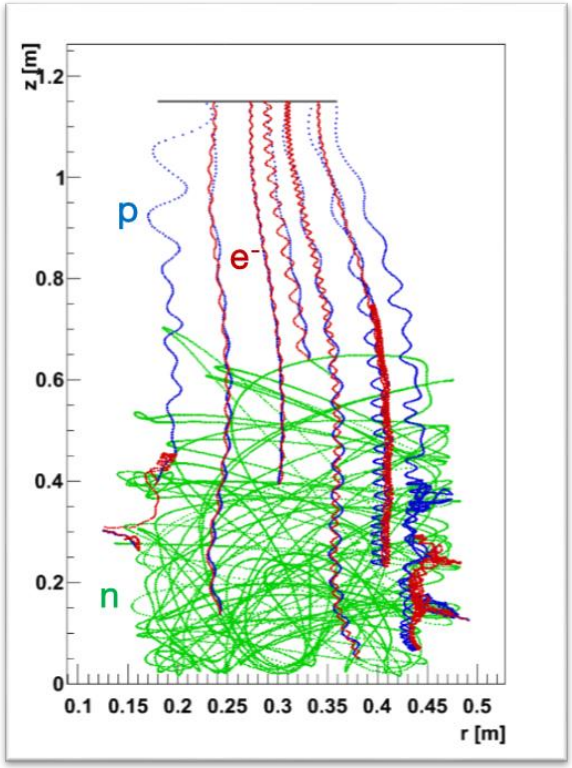

Proton Detector Readout Concept

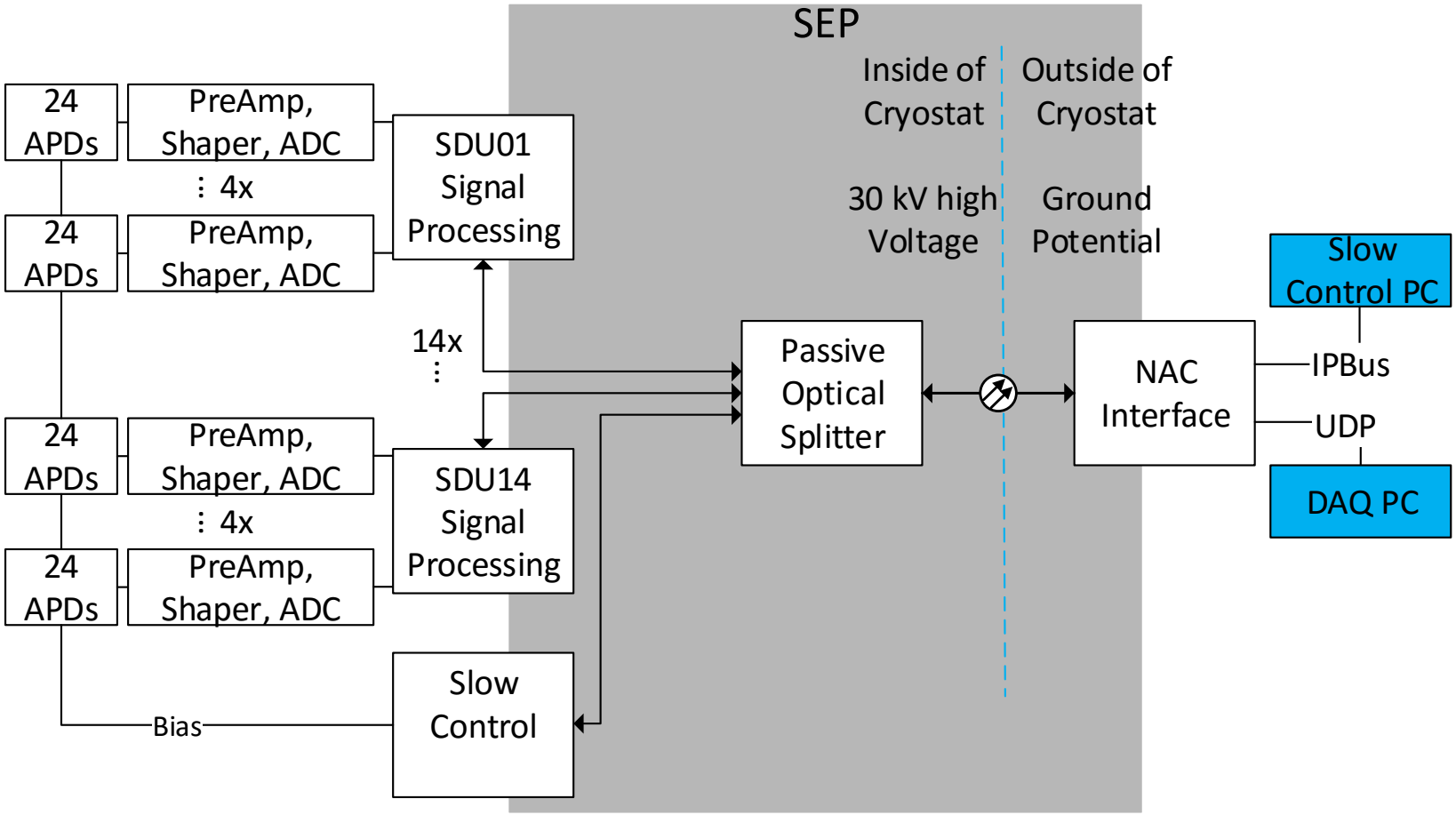

Proton Detector Readout Concept

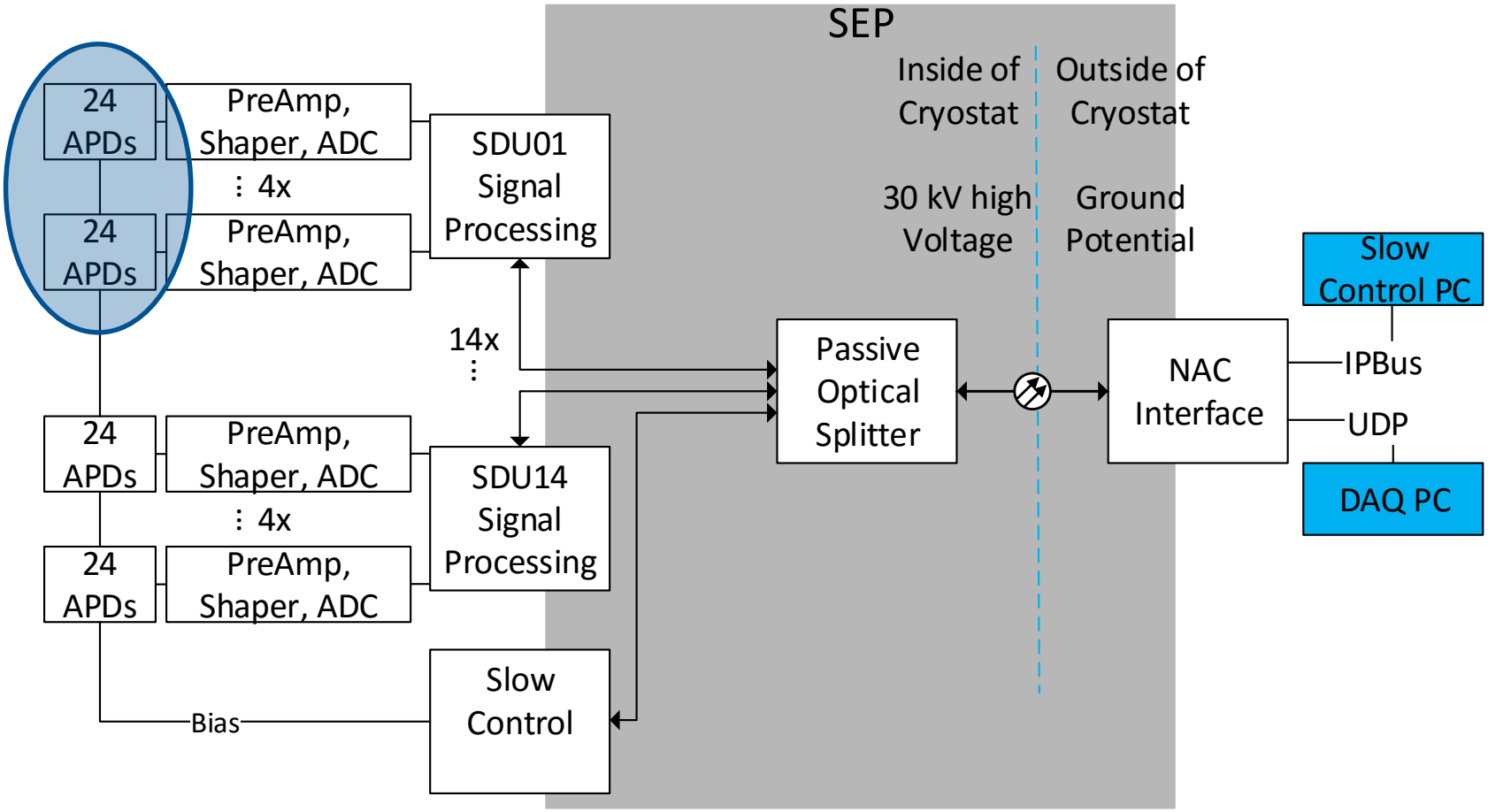

Hamamatsu S11048 APD

- 6.8x14 mm^2 active area
- 9x18 mm^2 size
- 4.4 %/V gain sensitivity to voltage at a gain of 100
- 250 pF terminal capacitance at a gain of 50
- Operational voltage of 365 V to 440 V
- No epoxy window since low energy protons would be absorbed
- Commissioning tests with samples done
- Delivery of first APDs in December

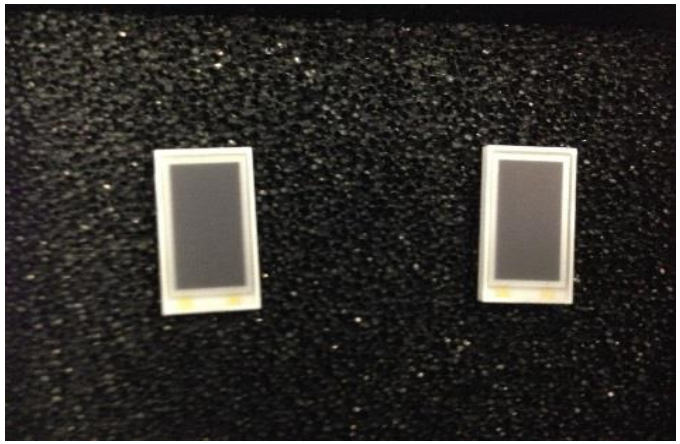

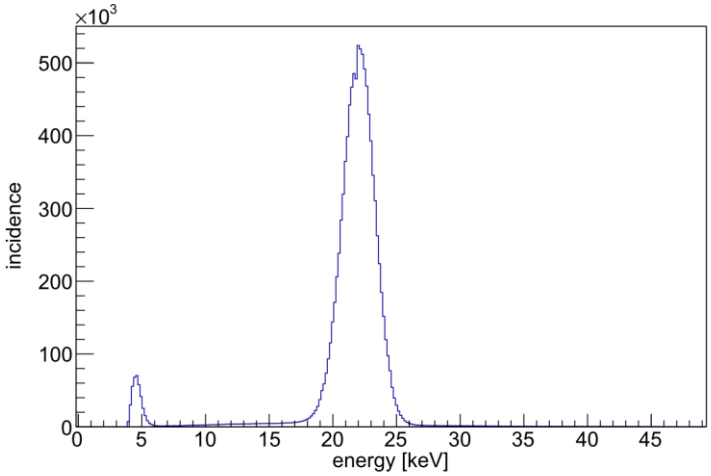

Proton Detector Readout Concept

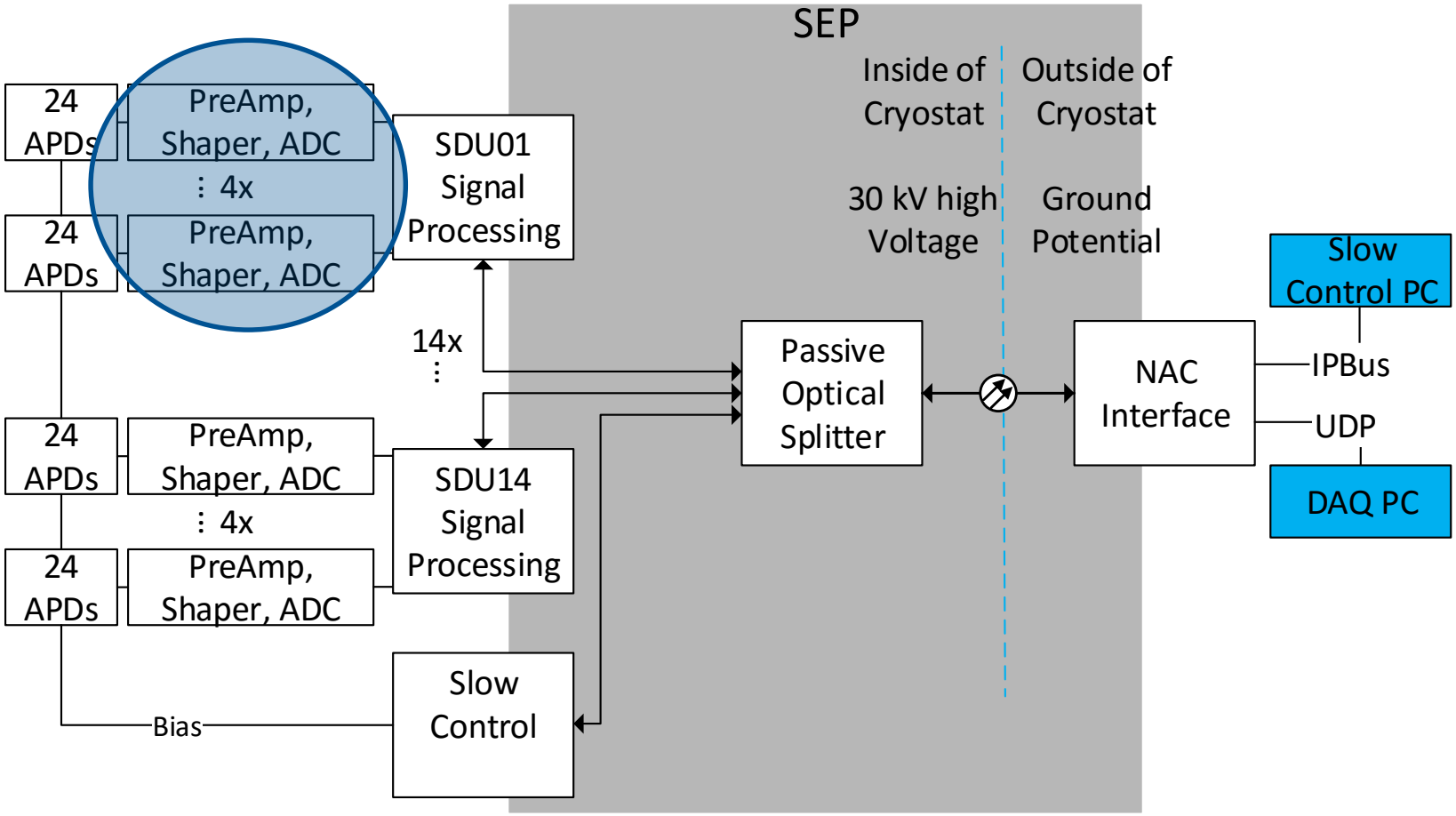

Frontend Electronics

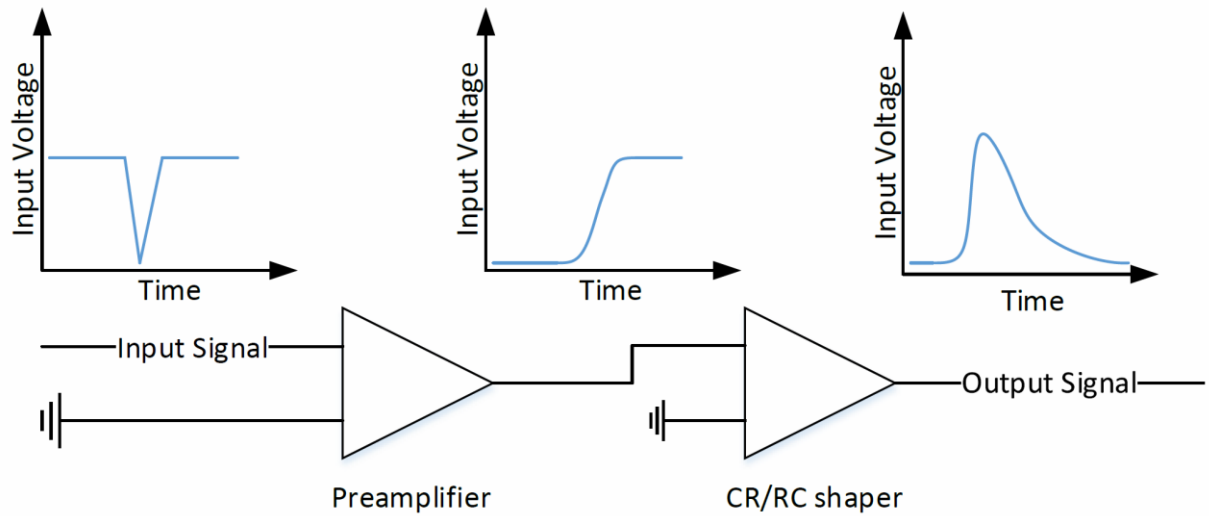

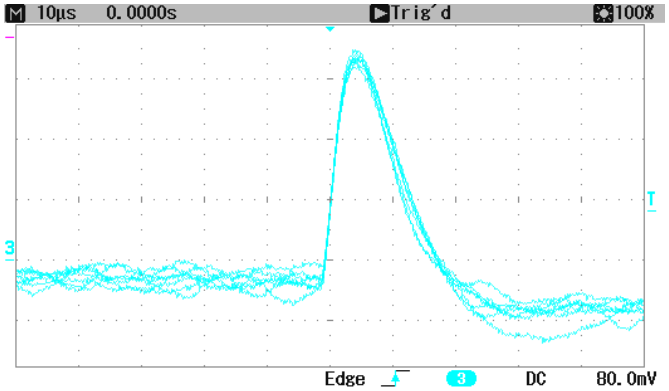

Frontend Electronics – Preamplifier and Shaper

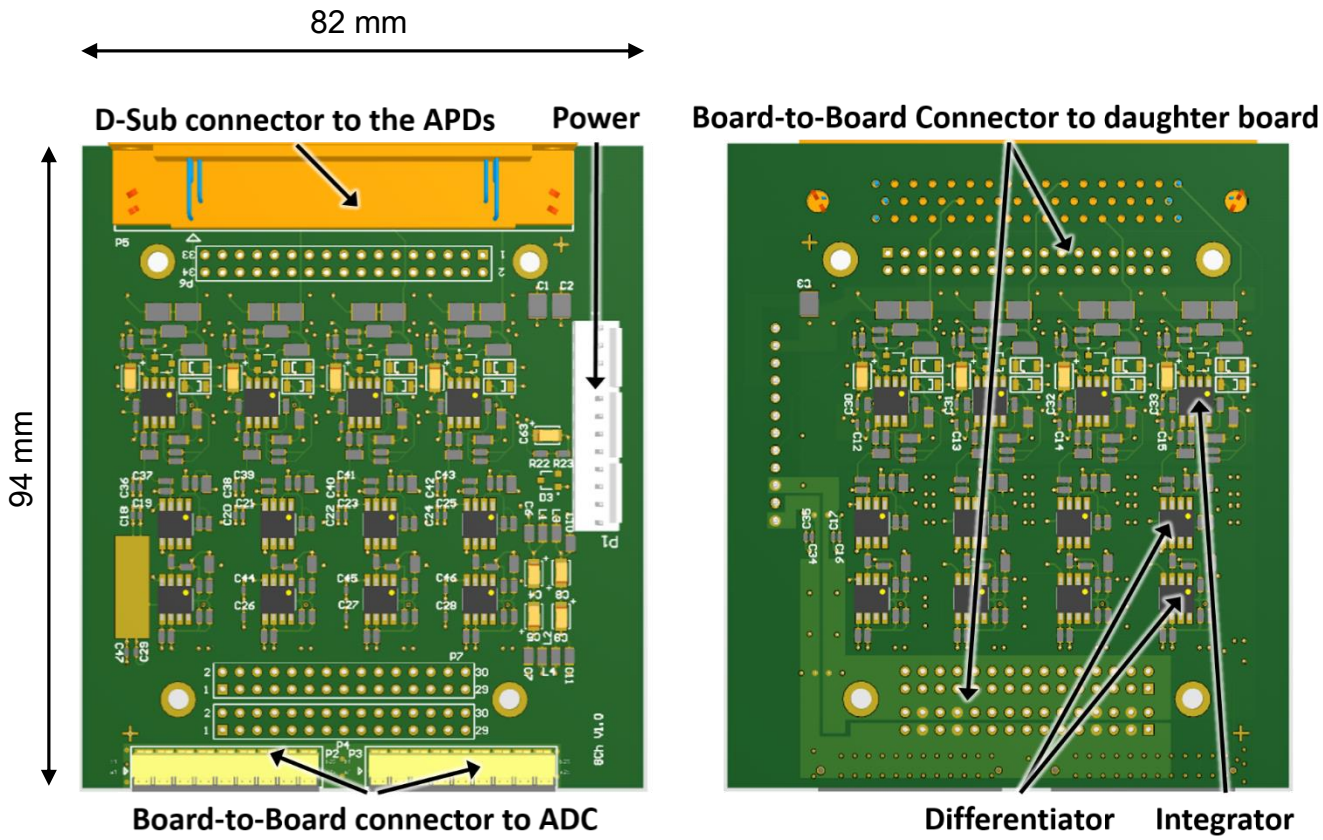

Frontend Electronics – ADC

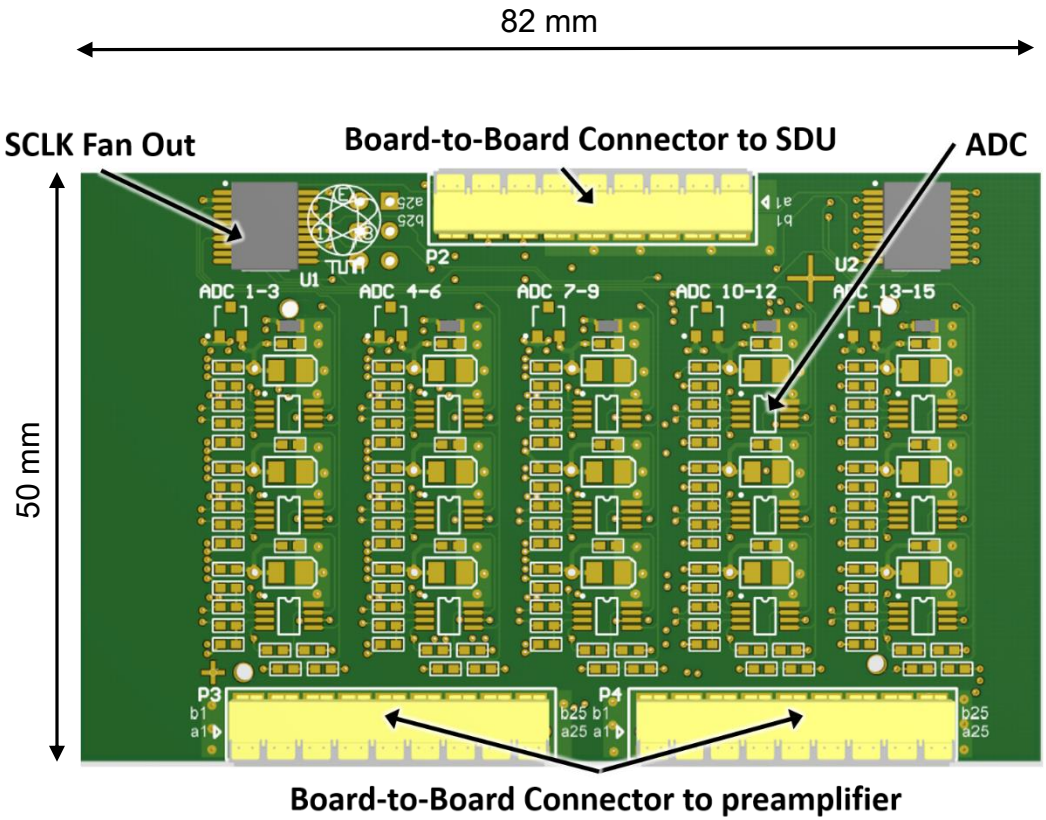

Proton Detector Readout Concept

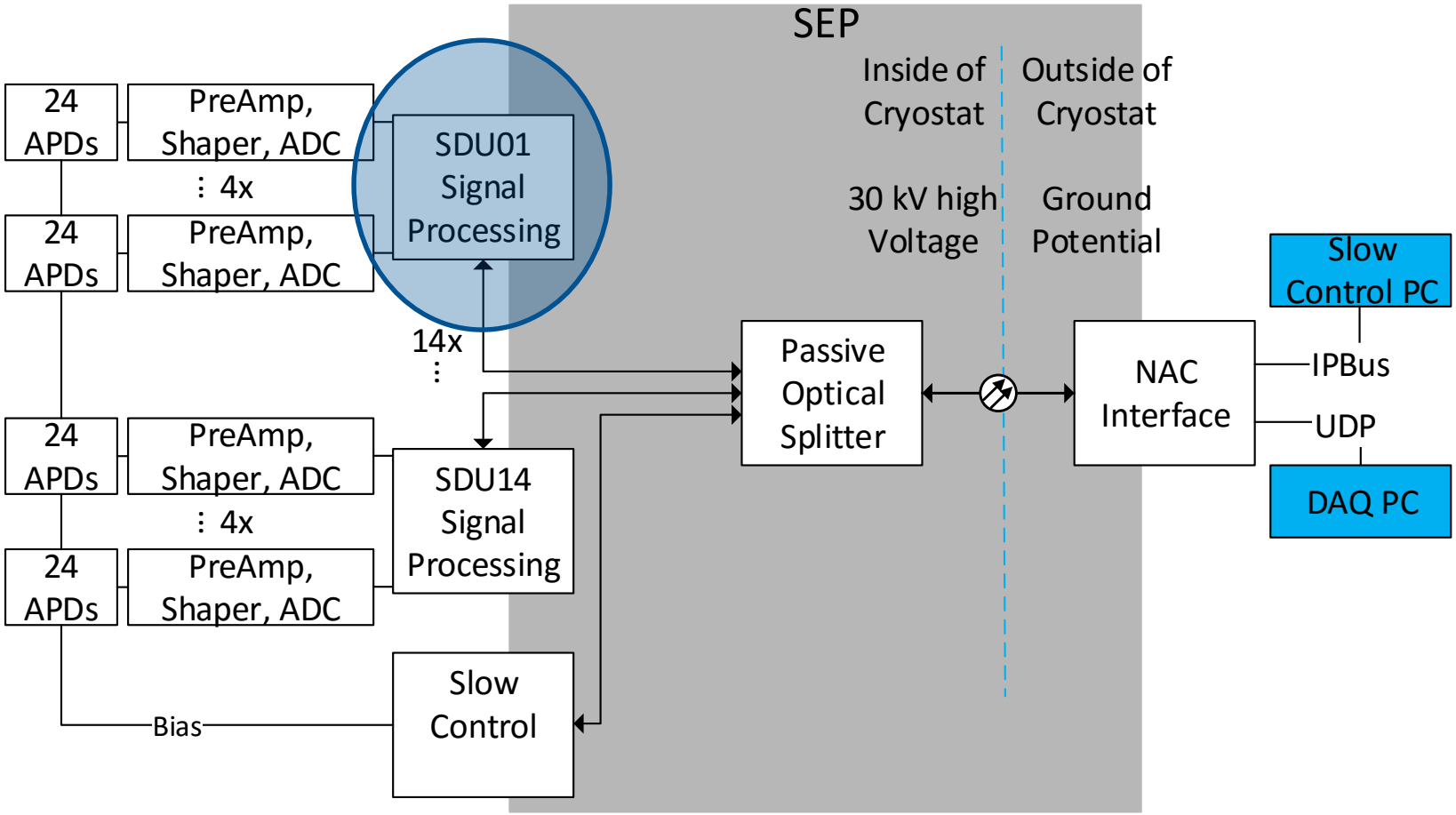

Signal Detection Unit

- Handles 96 detector channels
- Multi-threaded signal detection logic
- SEP slave

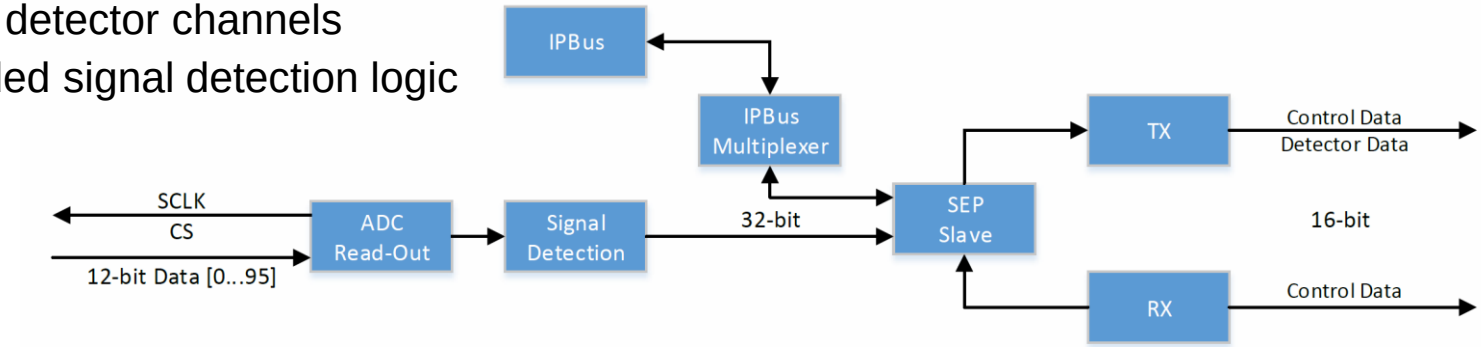

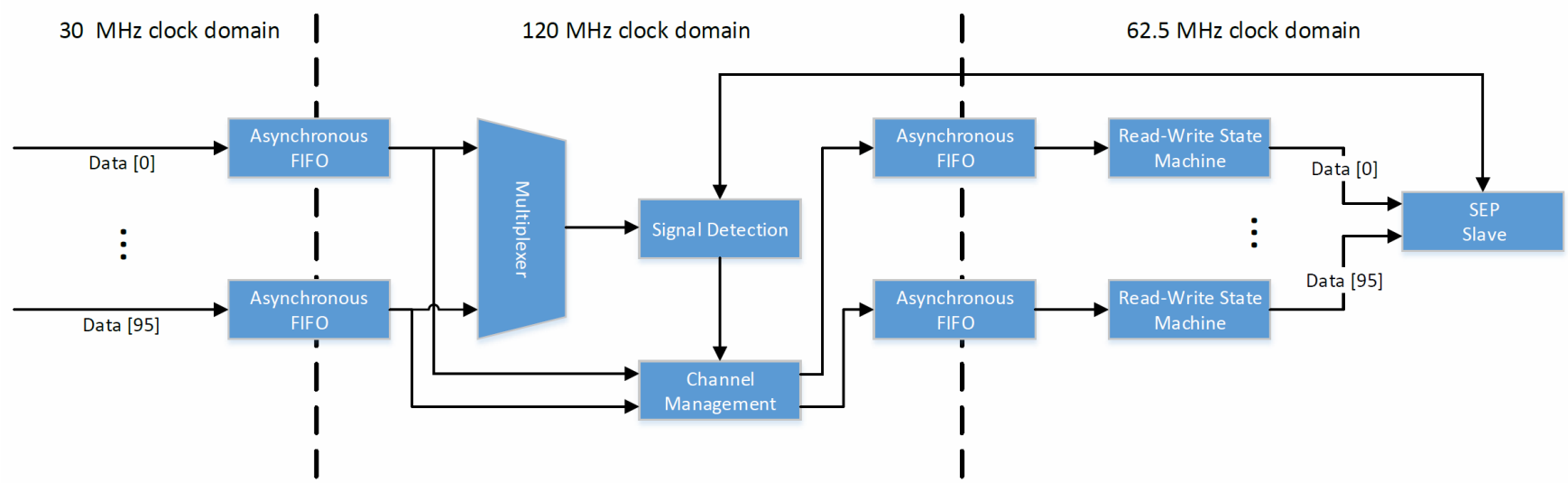

Signal Detection Algorithm

- "Real-time" pedestal calculation: Averaging over N_{avg} samples
- Calculating sigma noise over N_{avg} samples: Calculating quadratic deviation from mean value
- Signal Detection: If n_s consecutive samples > pedestal + $x_f \cdot \sigma$
- Trigger threshold configurable to exactly defined signal/noise ratio
- Each channel is treated by itself
- Only triggered channels will be written to NAC

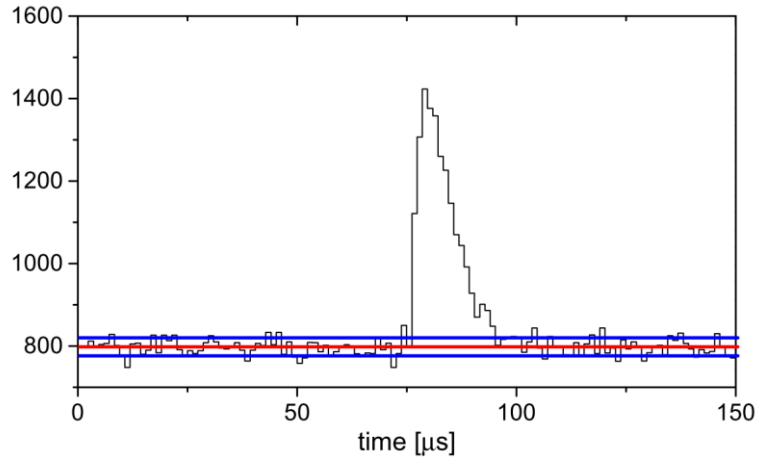

Signal Detection Unit

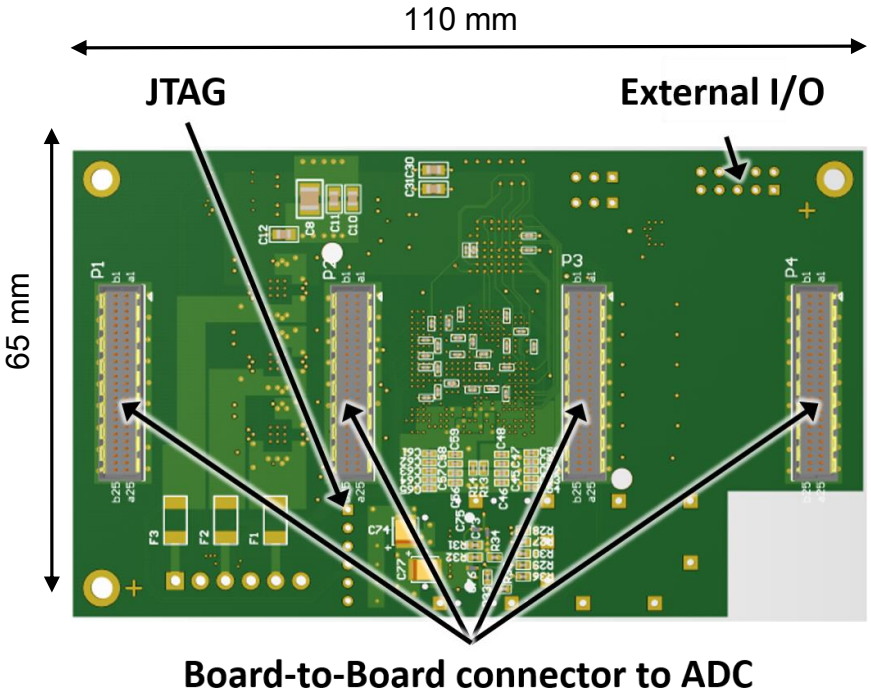

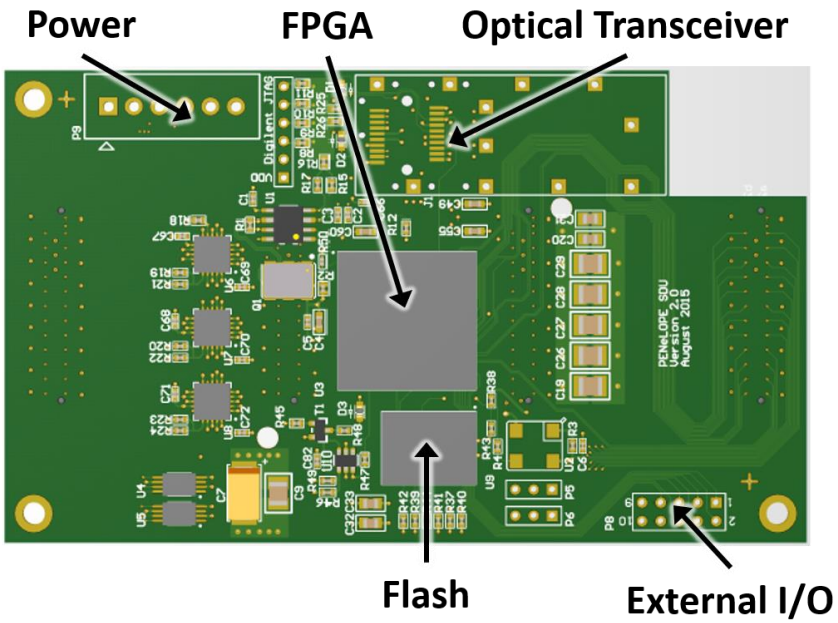

Proton Detector Readout Concept

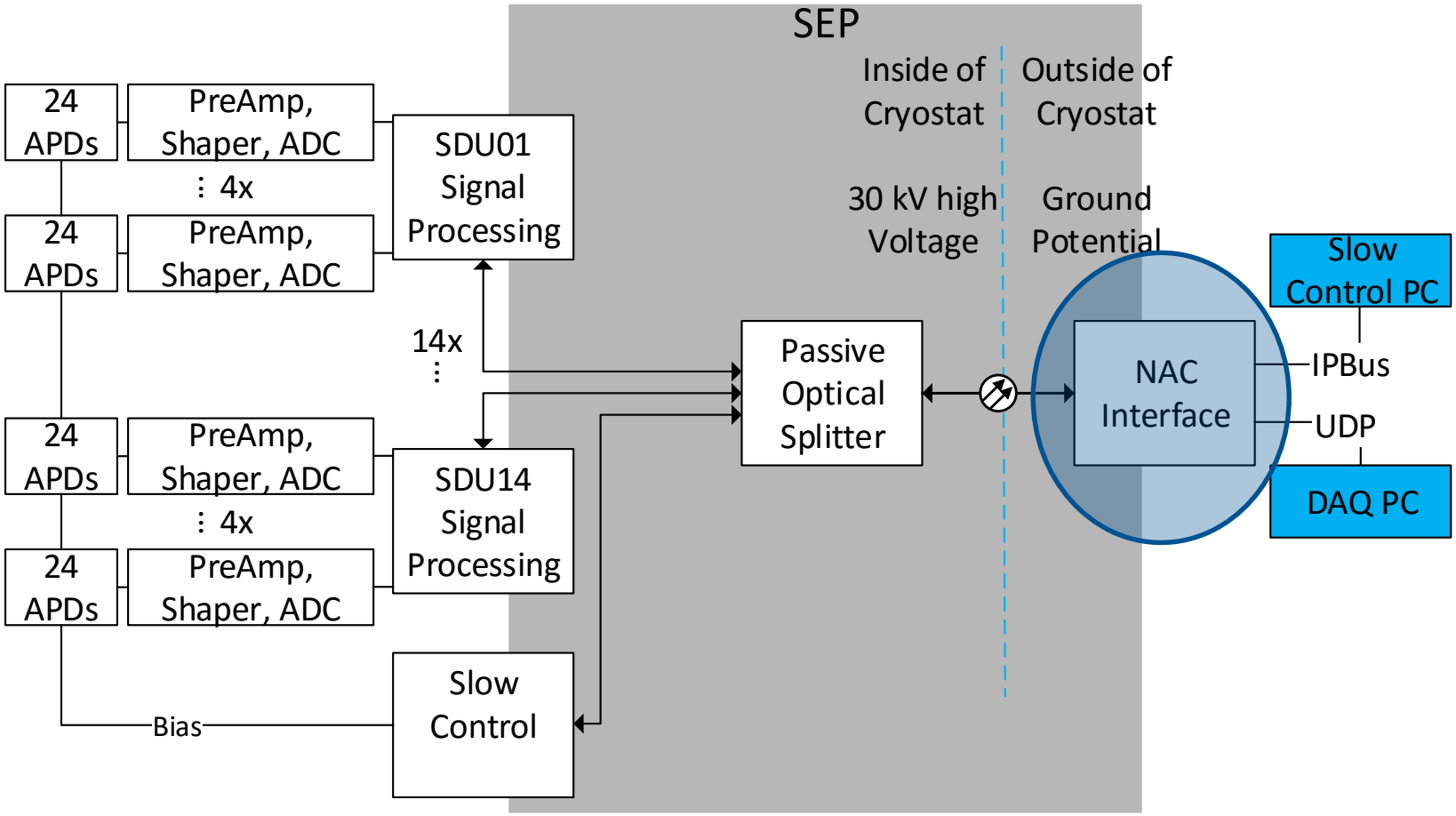

Network Access Controller

- Receive control data via IPBus
- Forward IPBus frames to the slaves
- Prepare detector data for UDP transmission to the DAQ computer
- Same board as for the SDU will be used

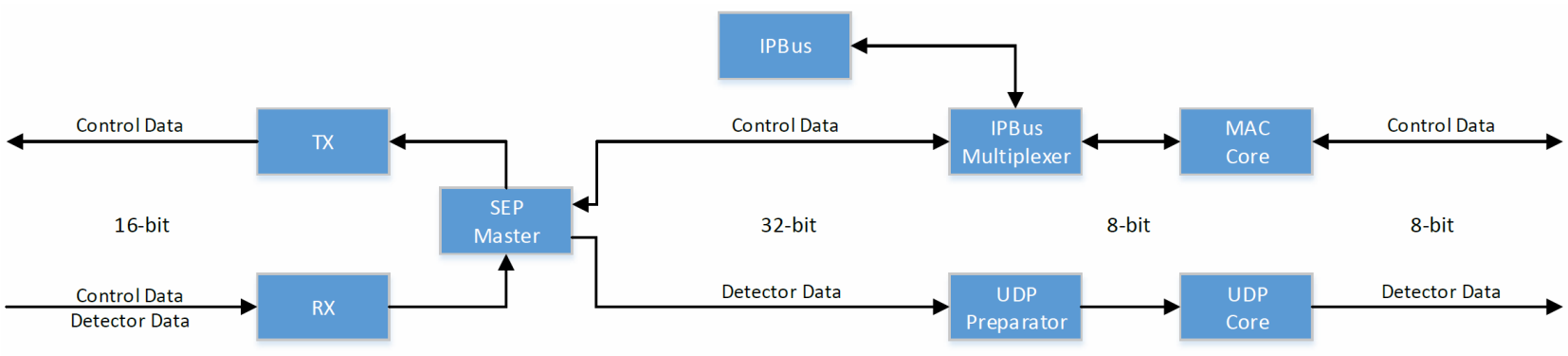

Switched Enabling Protocol (SEP)

- Each slave gets unique ID via the DNA
- Each slave gets unique IP address by ID
- Readout of slaves in Round-Robin manner
- Message addressed to one slave
- Message broadcasted to all slaves
- Using 8b/10b encoding
- Each slave gets minimum transmission window which can be extended by open frames
- Standard AXI-Stream interface for users

Transmission Time [µs]	Efficiency [%]
25000	99,93
10000	99,84
1000	98,42
500	96,90
100	86,20

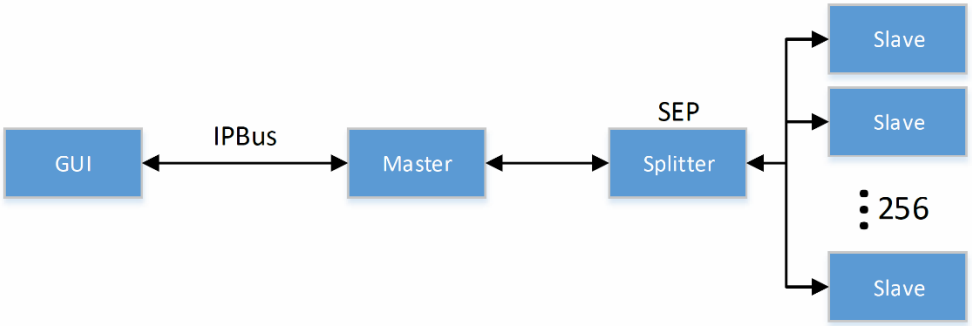

Proton Detector Readout Concept

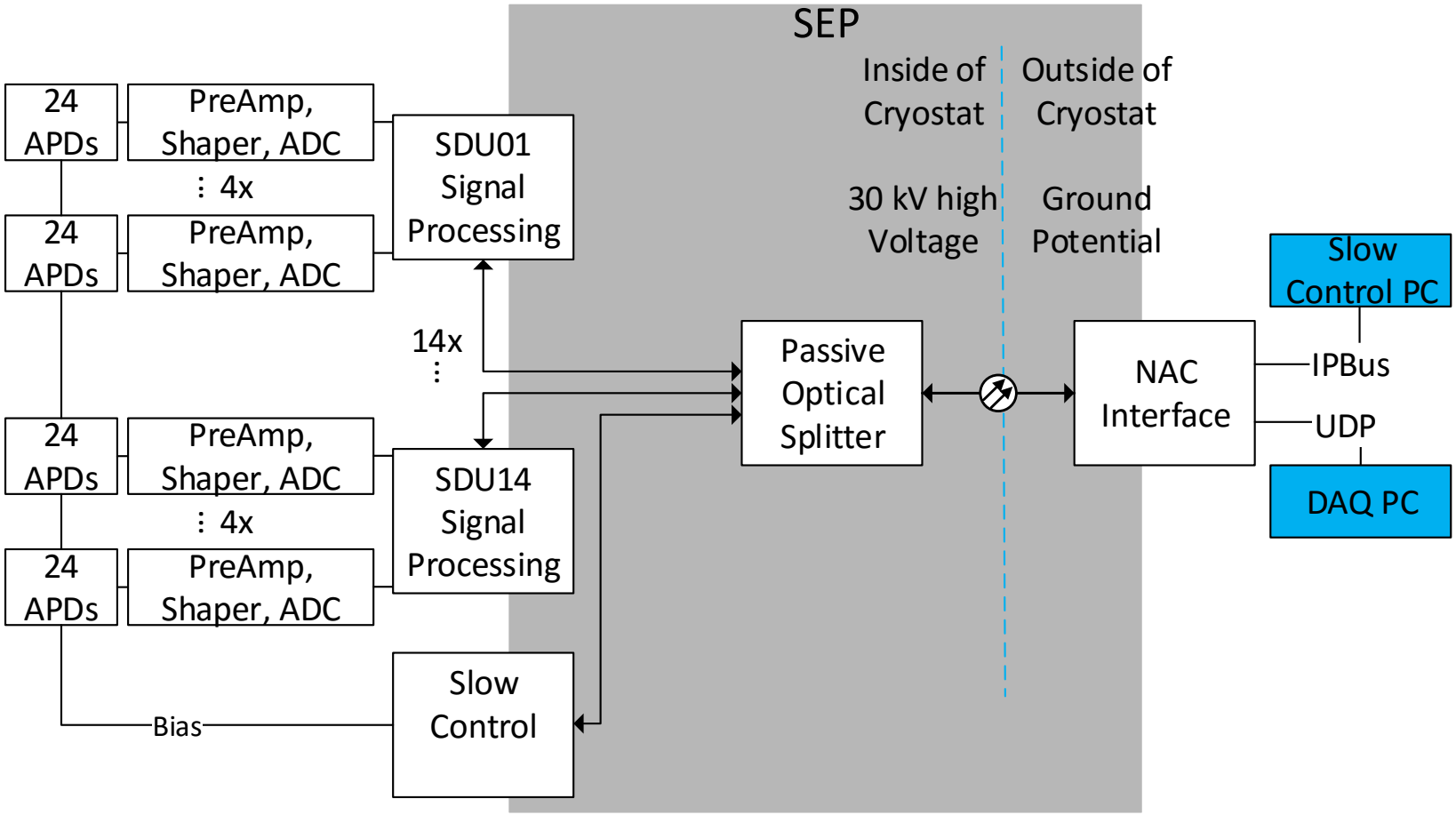

Proton Detector - Complete

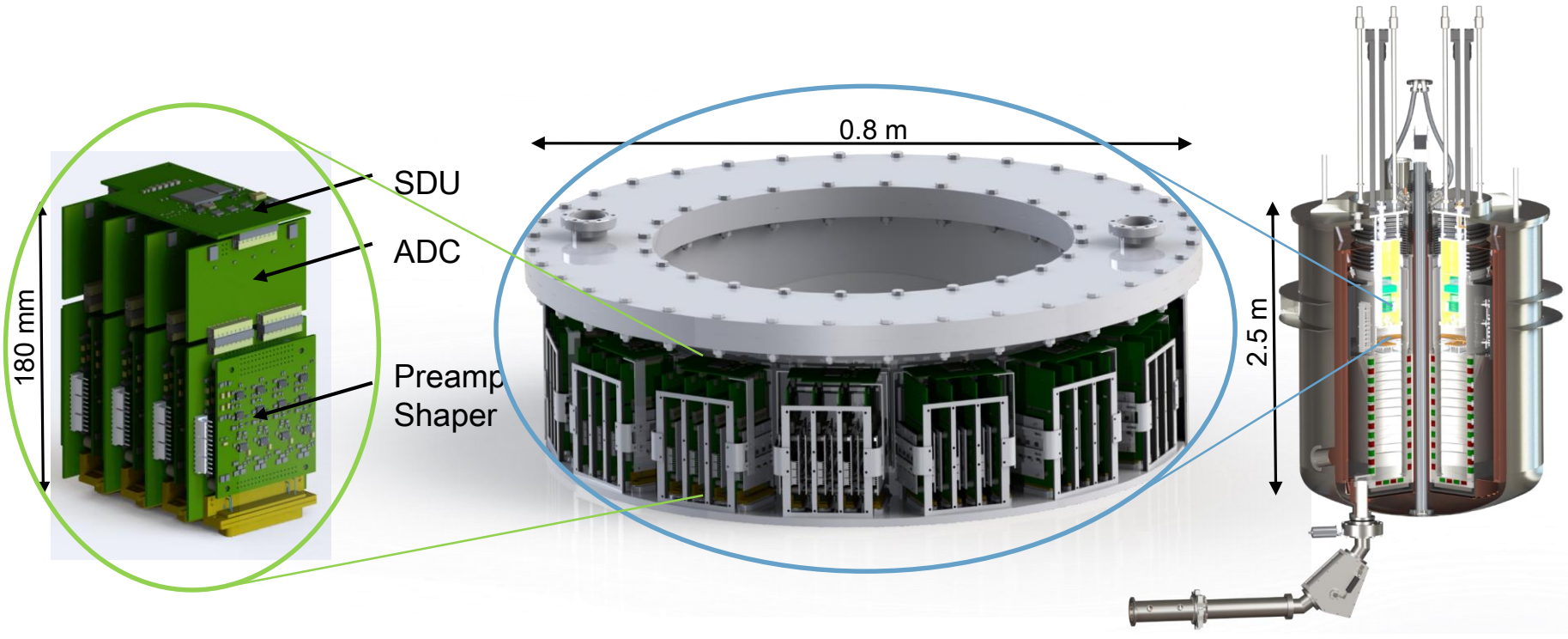

Test of APDs

- Proton beam test at the paff accelerator with 30 keV protons
- 1.29 keV energy resolution at 300 K
- Usable with proton energies downto about 15 keV

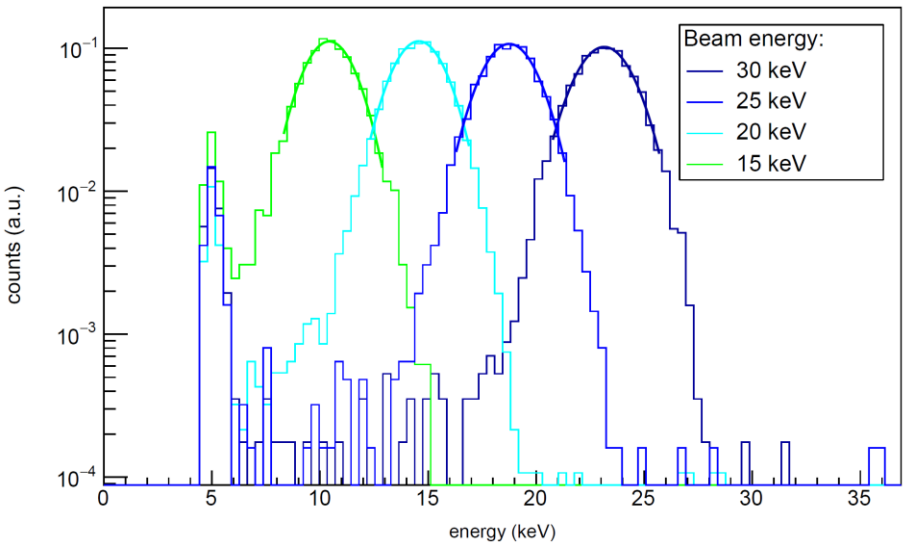

Conclusion and Outlook

- Multi-channel, self-triggering readout system: 1200 channels
- Expected data rate: 500 Mbit/s
- Possible data rate: 1000 Mbit/s
- Newly developed protocol with a link utilization of 98.42 % for PENeLOPE
- Complete electronics have been developed

- Tests with arriving APDs
- Test set-up for APDs has to be finished
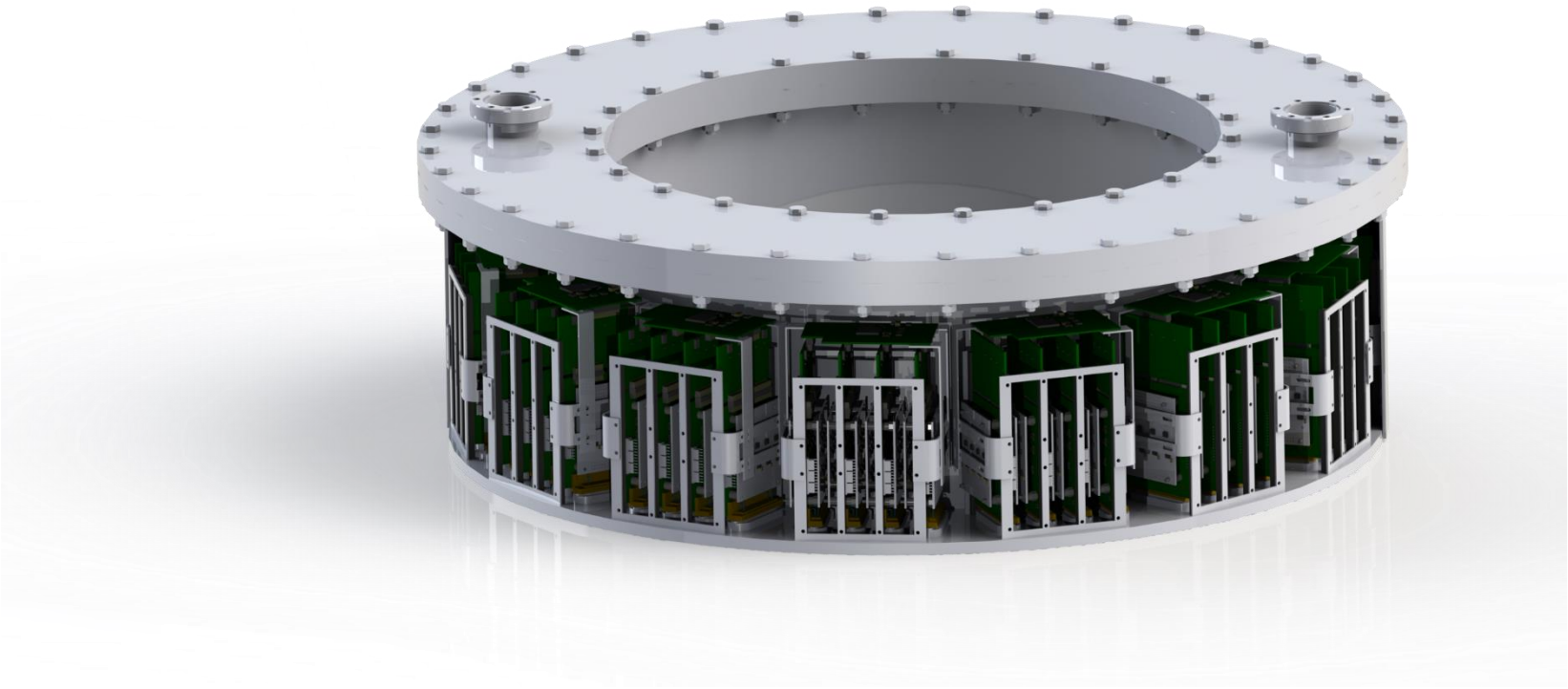
Thank you for your attention